LOOM DESIGN

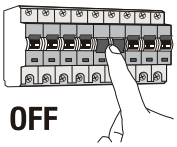

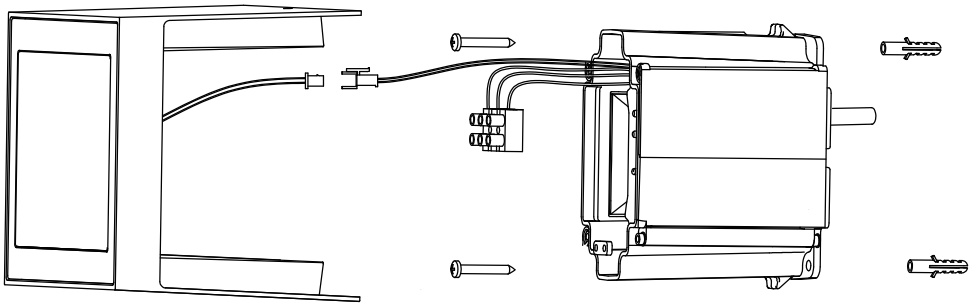

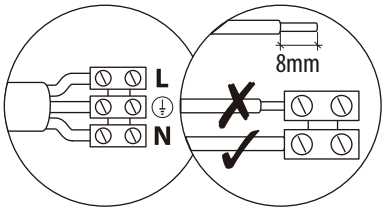

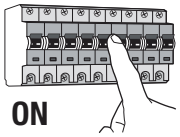

2400464900